Electrolux PROFESSIONAL

Service Trolleys
Three Tier Service Trolley with Handle 600 mm

ITEM #

MODEL #

NAME #

SIS #

AIA #

361202 (STR603WH) 3-tier Service Trolley with handle 600mm

Short Form Specification

Item No.

Constructed in 304 AISI stainless steel. Framework in mm25 tubing, completely welded. Seamless, sound-absorbing, shelves with double-folded edges. Shelves are welded to the framework. The handles are an extension of the load-bearing frame. N. 4 swivelling castors, two with brakes, mm125 in diameter, fitted with plastic bumpers. Shelves size mm600x600. Load capacity: 100 kg, uniformly distributed.

APPROVAL:

Main Features

- Framework in 25 mm tubing, completely welded.
- Load capacity of 100 kg uniformly distributed.
- Seamless sound-absorbing shelves with double-folded edges welded to the framework.
- Shelves size 600x600 mm.
- Strong, ergonomic handle is an extension of the load-bearing frame.
- 4 pivoting Ø 125 mm wheels, 2 of which with brakes, fitted with plastic bumpers

Construction

- Constructed entirely in 304 AISI stainless steel.

Service Trolleys
Three Tier Service Trolley with Handle 600 mm

Front

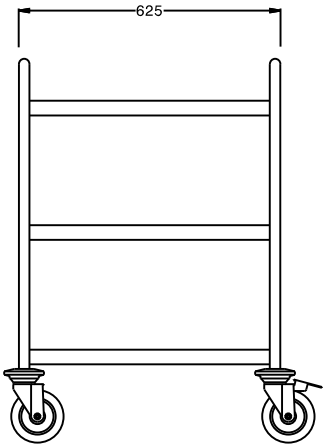

Side

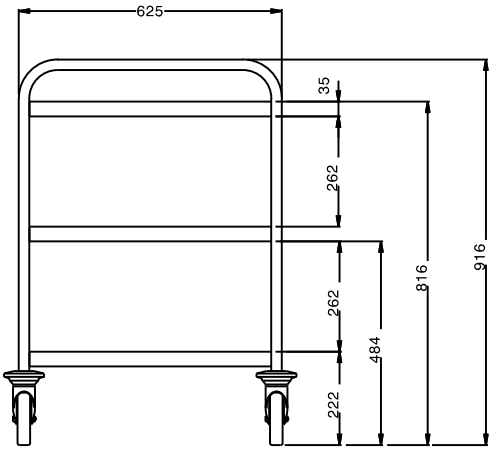

Top

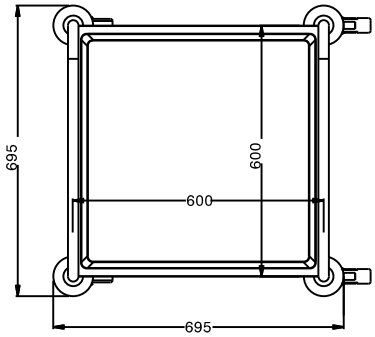

Key Information:

External dimensions, Width:	
361202 (STR603WH)	695 mm
External dimensions, Depth:	695 mm
External dimensions, Height:	916 mm
Wheel material:	Zinc plated
Wheel diameter:	Ø 125
Net weight:	22 kg

The company reserves the right to make modifications to the products without prior notice. All information correct at time of printing.

2024.10.06